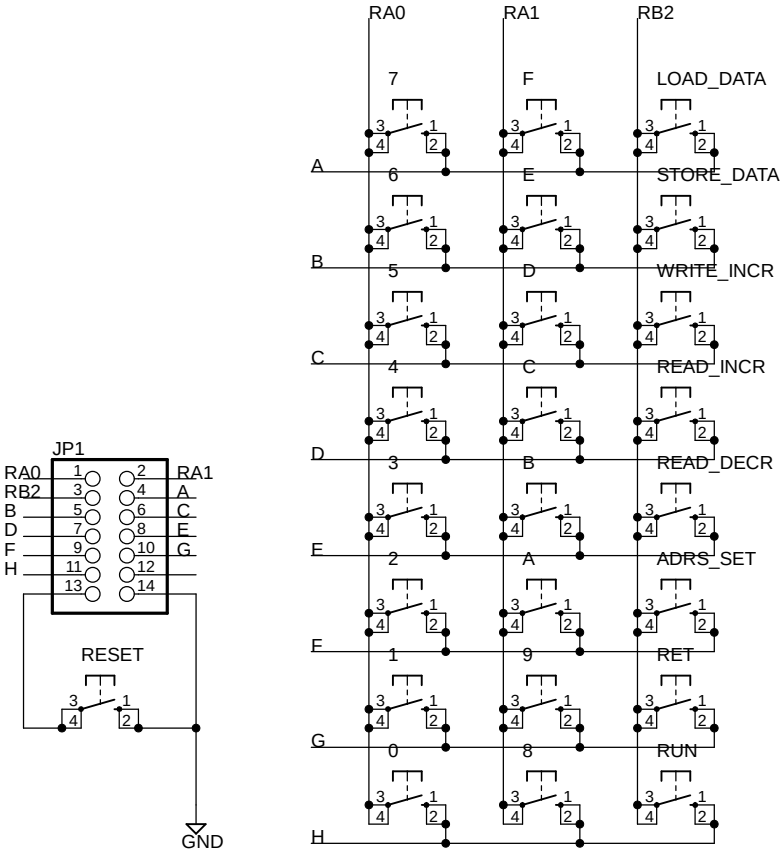
RA0
RA1
RB2
7
F
LOAD_DATA
A
6
E
STORE_DATA
B
5
D
WRITE_INCR
C
4
C
READ_INCR
D
3
B
READ_DECR
E
2
A
ADRS_SET
F
1
9
RET
G
0
8
RUN
H
JP1
RA0
RB2
B
D
F
H
RA1
A
C
E
G
RESET
GND