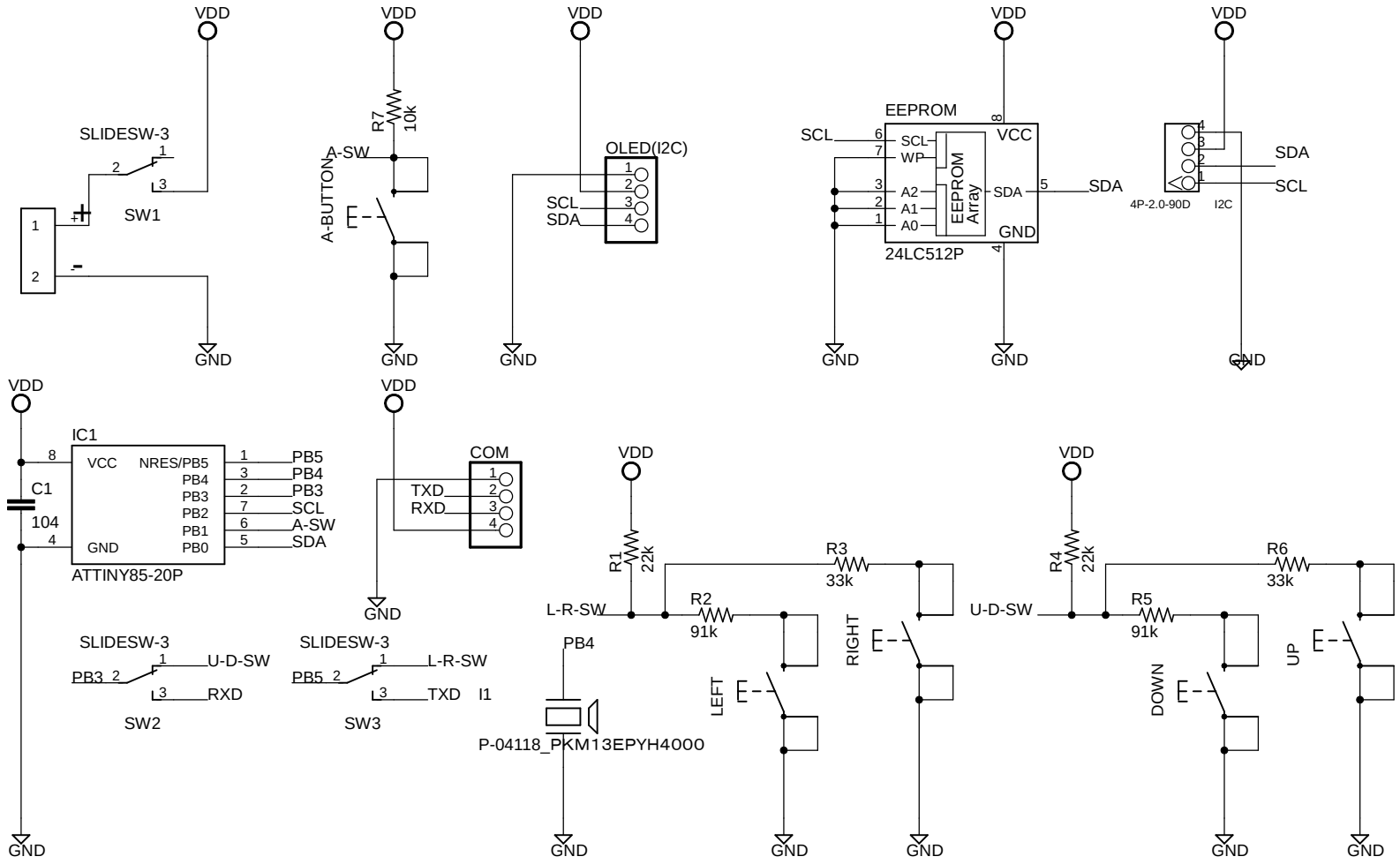

VDD
GND
SLIDESW-3
SW1
R7
10k
A-SW
A-BUTTON
OLED(I2C)
SCL
SDA
EEPROM
SCL
WP
A2
A1
A0
VCC
SDA
GND
EEPROM Array
24LC512P
4P-2.0-90D
I2C
IC1
VCC
NRES/PB5
PB4
PB3
PB2
PB1
PB0
GND
C1
104
ATTINY85-20P
PB5
PB4
PB3
SCL
A-SW
SDA
COM
TXD
RXD
SLIDESW-3
PB3
U-D-SW
RXD
SW2
SLIDESW-3
PB5
L-R-SW
TXD
I1
SW3
PB4
P-04118_PKM13EPYH4000
R1
22k
R2
91k
R3
33k
L-R-SW
LEFT
RIGHT
R4
22k
R5
91k
R6
33k
U-D-SW
DOWN
UP